LET THE LIGHT FLOOD IN

Ultrasky®
LANTERN by Ultraframe

ORANGERIES AND EXTENSIONS

ULTRASKY LANTERN, **MAXIMISE** NATURAL LIGHT IN YOUR ORANGERY OR EXTENSION

Ultrasky Lantern combines fresh modern styling with natural light to create a beautiful warm glazed extension with the style and grandeur of a traditional orangery. Engineered by Ultraframe, strength is the secret behind Ultrasky's success. A stronger, thermally insulated ridge means less bars are needed drawing more light into the room.

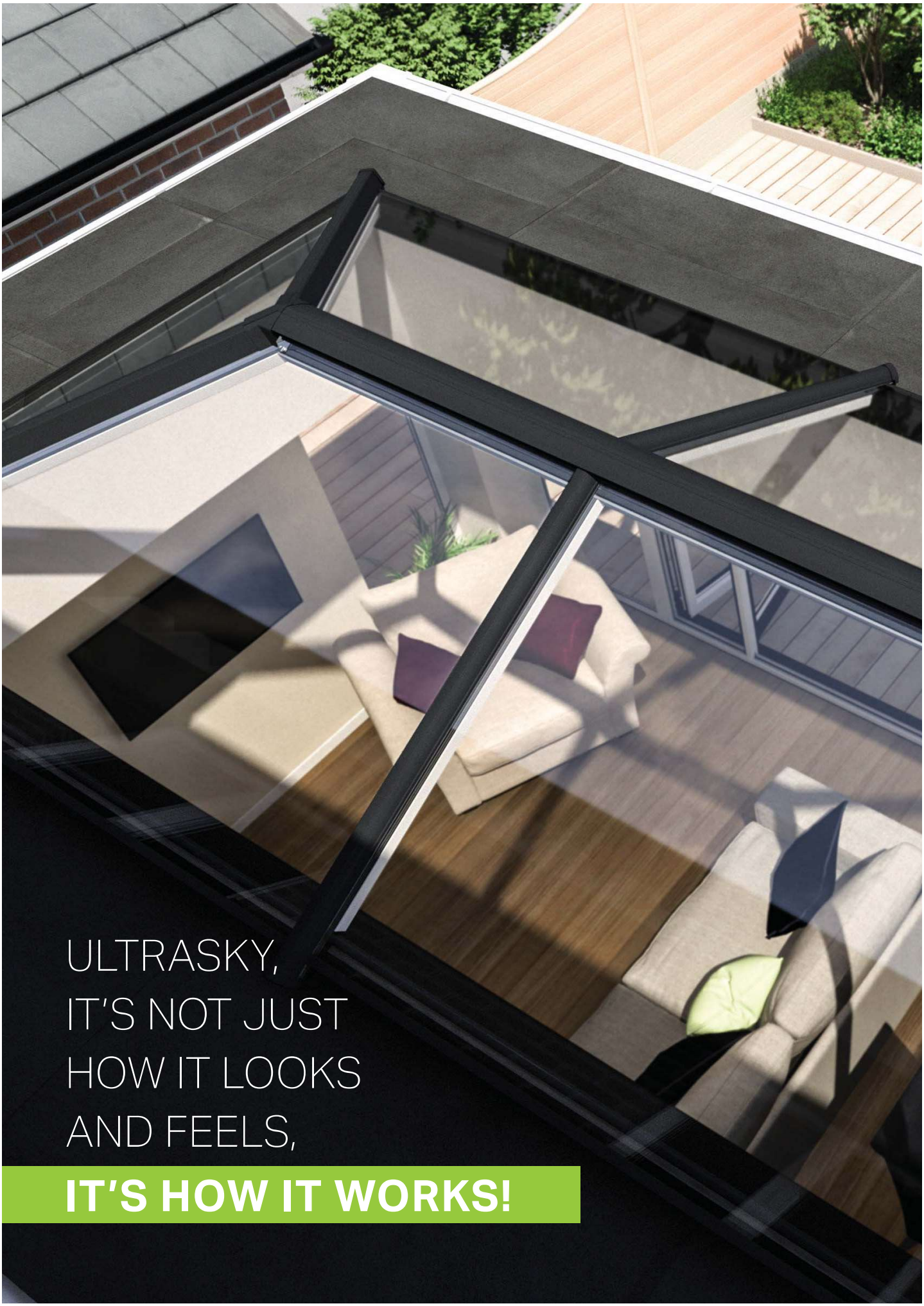
ULTRASKY,
IT'S NOT JUST
HOW IT LOOKS
AND FEELS,
IT'S HOW IT WORKS!

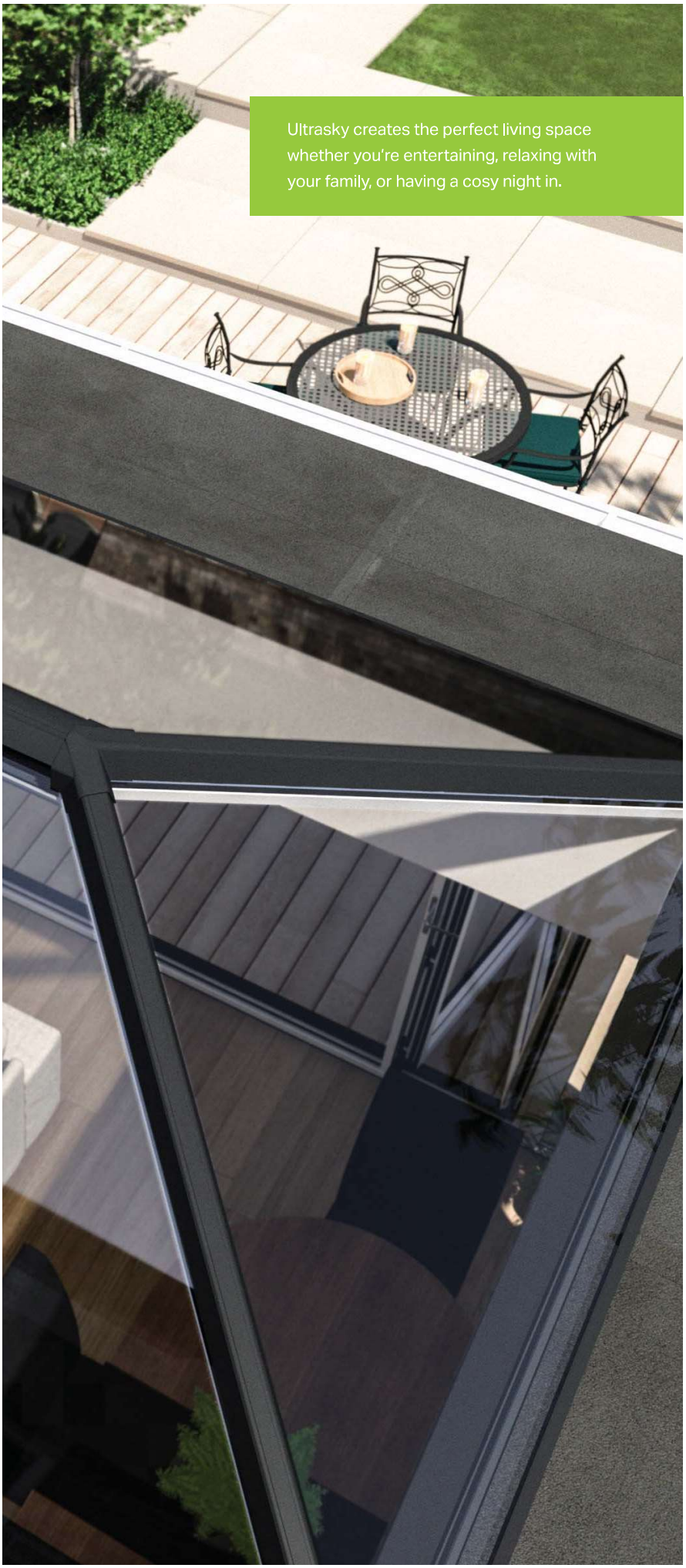

Ultrasky creates the perfect living space whether you're entertaining, relaxing with your family, or having a cosy night in.

The Ultrasky Lantern can be inserted into a flat roof or a traditional orangery deck and is ideal for large builds where the roof height is restricted. Unlike many other lanterns, Ultrasky Lantern has a 25° pitch which draws more light into the room creating a stunning focal point.

Ultrasky Lantern's extra strength means less bars and uninterrupted sight lines for maximum light. It is available in a wide variety of sizes to a maximum width of 4m and a length of 5.8m.

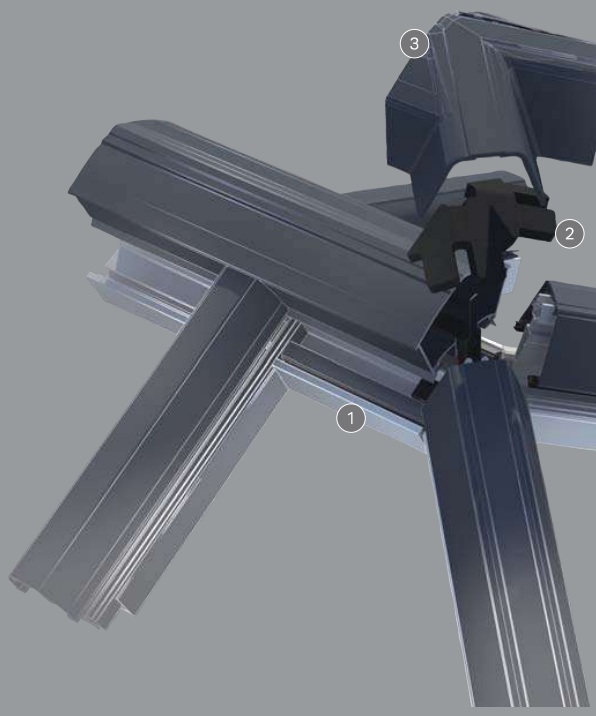

storm SHIELD PROTECTION SYSTEM

Ultrasky's Stormshield Protection System includes:

1 Waterproof glazing compression trims
2 Ridge end weathering shields
3 'Secure fit' radius end covers

STRENGTH, WARMTH AND MAXIMUM LIGHT

PERFORMANCE ENGINEERING

50% BETTER THERMAL PERFORMANCE

4x STRONGER FEWER BARS MORE LIGHT

10 YEAR GUARANTEE

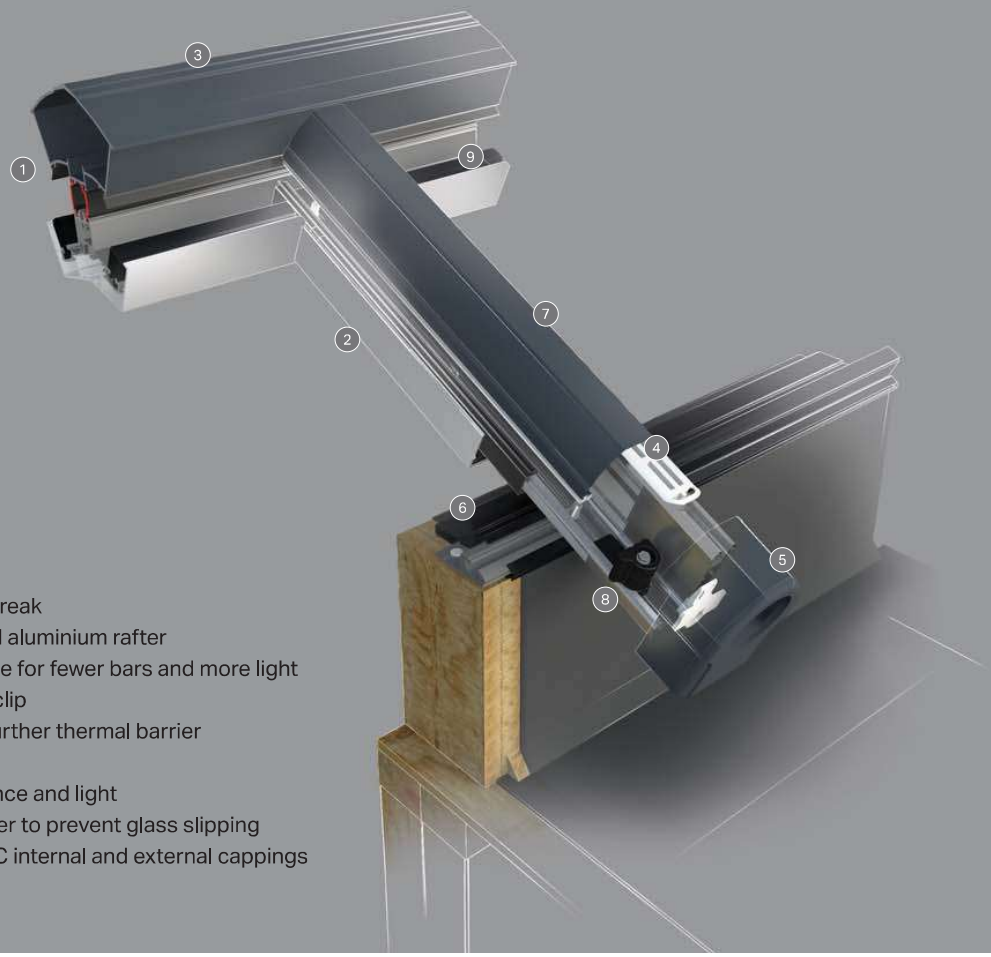

1 High performance thermal break
2 Patented thermally insulated aluminium rafter
3 Super strong aluminium ridge for fewer bars and more light
4 Thermally isolating top cap clip
5 'Secure-fit' end caps are a further thermal barrier
6 Thermally broken eaves rail
7 Superior 25° pitch for elegance and light
8 Adjustable reinforced stopper to prevent glass slipping
9 Choice of aluminium or uPVC internal and external cappings

ULTRASKY LANTERN IS STUNNING, ENHANCING **ANY STYLE** OF PROPERTY, TRADITIONAL OR MODERN ALIKE

SIZES
The Ultrasky Lantern is available in a number of bespoke rectangular sizes ranging from 1.5m long x 1m wide, up to 5.8m long x 4m wide*.

COLOUR OPTIONS
Externally available in White uPVC or aluminium, in White, Anthracite Grey or Satin Black. Internally the Ultrasky Lantern is clad in either uPVC or aluminium in White, Anthracite Grey or Satin Black.

GLAZING
The highly thermally efficient glazing options will help reduce heat loss and noise pollution, whilst letting the desired amount of light into your room.

EXTRAS
Add a roof vent to let in the fresh air – roof vents are available with a manual opener, automatic opener or an automatic opener with rain sensor and temperature control. Roof vents only available in selected sizes and colours.

KEY PERFORMANCE CRITERIA
Rectangular double ended lanterns, with a width up to 4m and a length up to 5.8m*. 25 degree fixed pitch to all four sides. Thermally broken aluminium ridge body.

Low profile eaves rail (no gutter) designed to be fitted with oversailing 24mm double glazed units (which can be supplied with the Lantern).

Ultrasky is designed around maximum uninterrupted sight lines – glazing bar numbers are reduced (or can be added if you prefer) and the ridge board and hub ends are as unobtrusive as possible.

The thermal performance has been optimised to make it suitable for extensions in domestic properties. Typical U value with 1.2 glass for a 1m wide x 2m long lantern is 1.4 W/m2K.

*Width and length are defined as to the external face of the timber kerb, recommended to be 150mm high x minimum of 70mm wide.

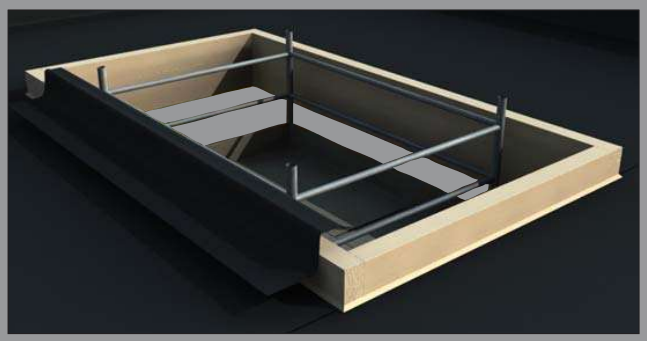

A timber kerb of 150mm high x 70mm wide (not supplied) must be fitted around the opening in the flat roof – the weatherproofing membrane laps onto the top face of the kerb.

IMPORTANT: SET OUT DIMENSIONS ARE ALWAYS MEASURED TO EXTERNAL FACE OF KERB

Ultraframe

Transforming light and space

Job No. 3545 Ultrasky LANTERN USOB001 08/17

It is Ultraframe's policy to continually seek to improve it's products, processes and service and we reserve the right to change specifications without prior notice. We have been trading for nearly 35 years and strive to deliver unrivalled quality and service.